i.MX8M Plus PWR

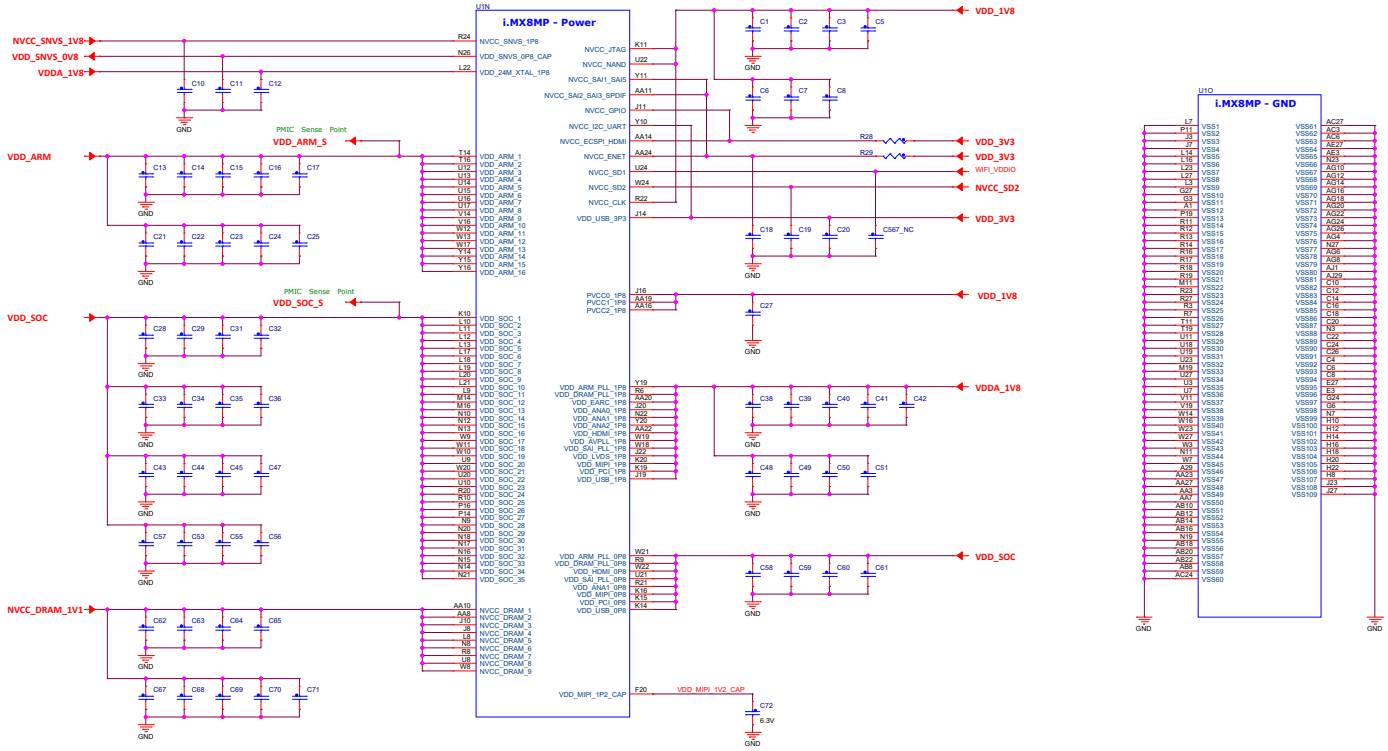

POLYHEX Beyond the Embedded Deployment	Polyhex Technology Company Limited www.debix.io www.polyhex.net www.polyhexpc.com
This document contains information proprietary to Polyhex and shall not be used for engineering design, procurement or manufacture in whole or in part without the express written permission of Polyhex Semiconductors	
Designer: HW	Drawing Title: DEBIX Infinity Schematics
Reviewer: HW	Page Title: PAGE01 CPU PWR
Date:	Sheet 1 of 11 Rev V02

i.MX8M Plus IO Interface

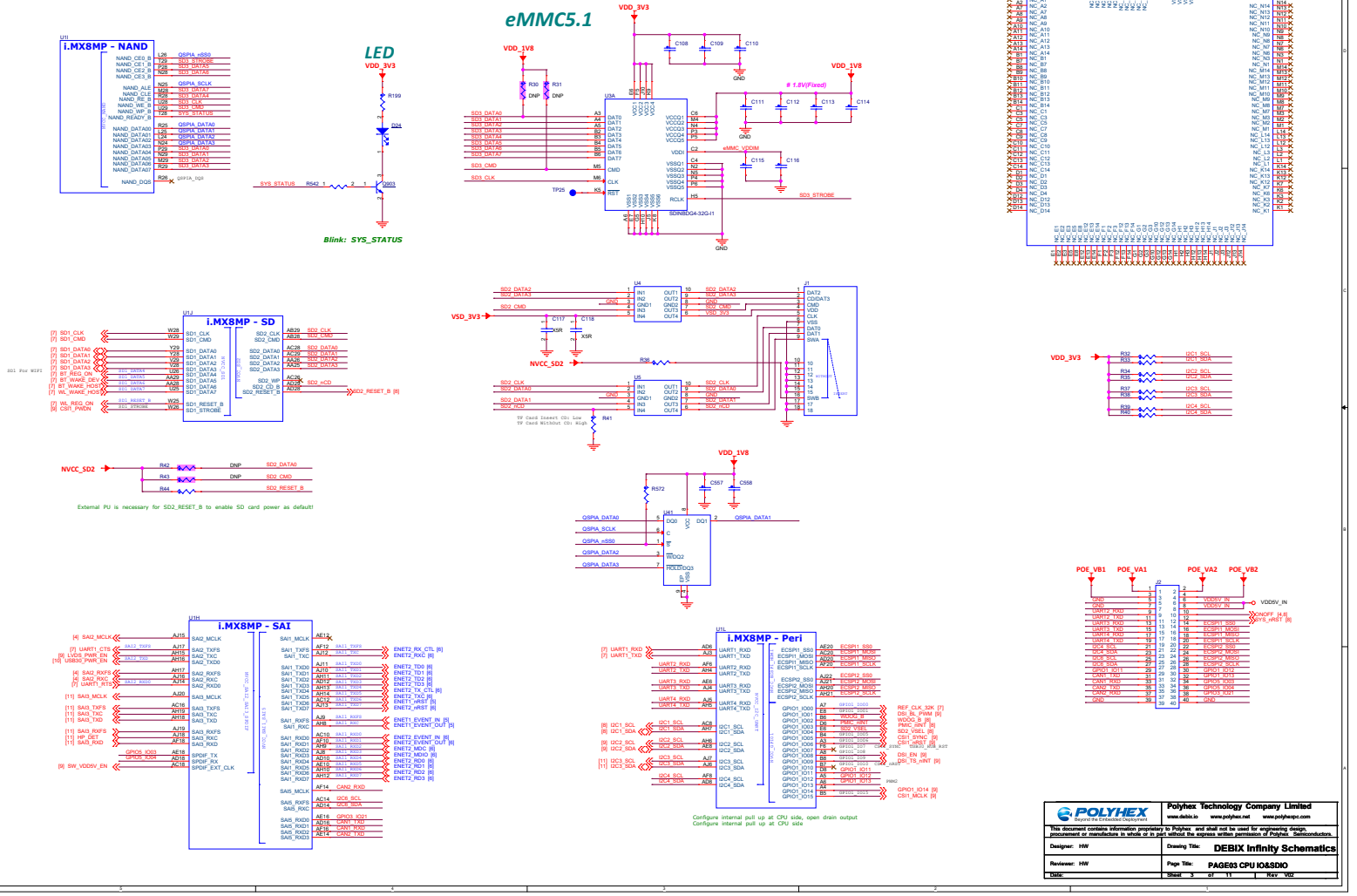

Polyhex Technology Company Limited	
POLYHEX Beyond the Embedded Deployment	www.debix.io www.polyhex.net www.polyhexpc.com
This document contains information proprietary to Polyhex and shall not be used for engineering design, procurement or manufacture in whole or in part without the express written permission of Polyhex. Semiconductors.	
Designer: HW	Drawing Title: DEBIX Infinity Schematics
Reviewer: HW	Page Title: PAGE03 CPU IO&SDIO
Date:	Sheet 3 of 11 Rev V02

i.MX8M Plus PHYs MISC

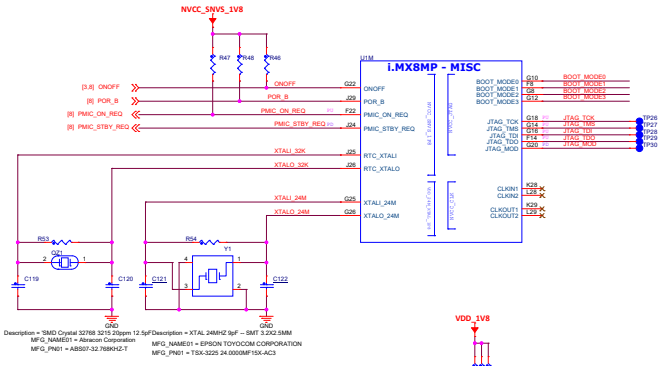

Description = SMD Crystal 32768 3215 20ppm 12.5pFDescription = XTAL 24MHZ 9pF – SMT 3.2X2.5MM
MFG_NAME01 = Abracon Corporation
MFG_PN01 = ABS07-32.768KHZ-T
MFG_NAME01 = EPSON TOYOCOM CORPORATION
MFG_PN01 = TSX-3225 24.0000MF15X-AC3

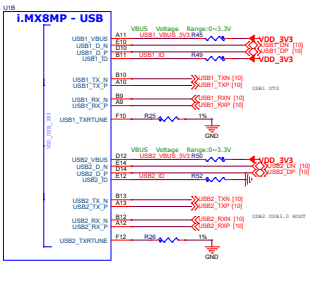

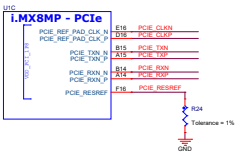

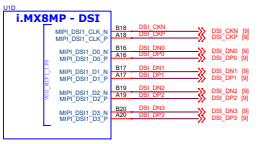

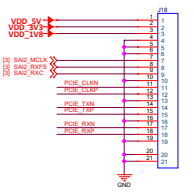

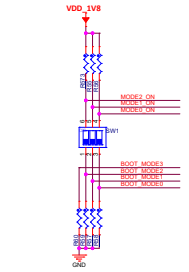

BOOT_MODE1	BOOT_MODE0	Boot Modes
0	0	Boot From Internal Fuses
0	1	USB Serial Download
1	*0*	*USDHC3 (eMMC boot only, SD3 8-bit)*
1	1	USDHC2 (SD boot only, SD2)

Boot Switch

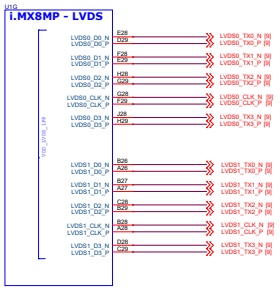

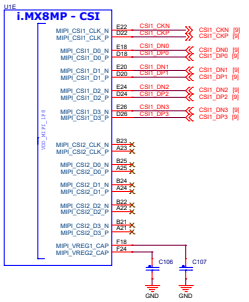

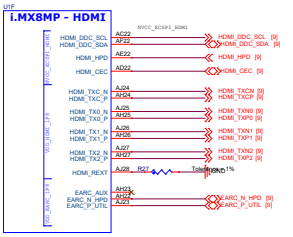

POLYHEX Beyond the Embedded Deployment	Polyhex Technology Company Limited www.debix.io www.polyhex.net www.polyhexpc.com		
This document contains information proprietary to Polyhex and shall not be used for engineering design, procurement or manufacture in whole or in part without the express written permission of Polyhex Semiconductors.			
Designer: HW	Drawing Title:	DEBIX Infinity Schematics	
Reviewer: HW	Page Title:	PAGE04 CPU PHY&MISC	
Date:	Sheet 4 of 11	Rev V02	

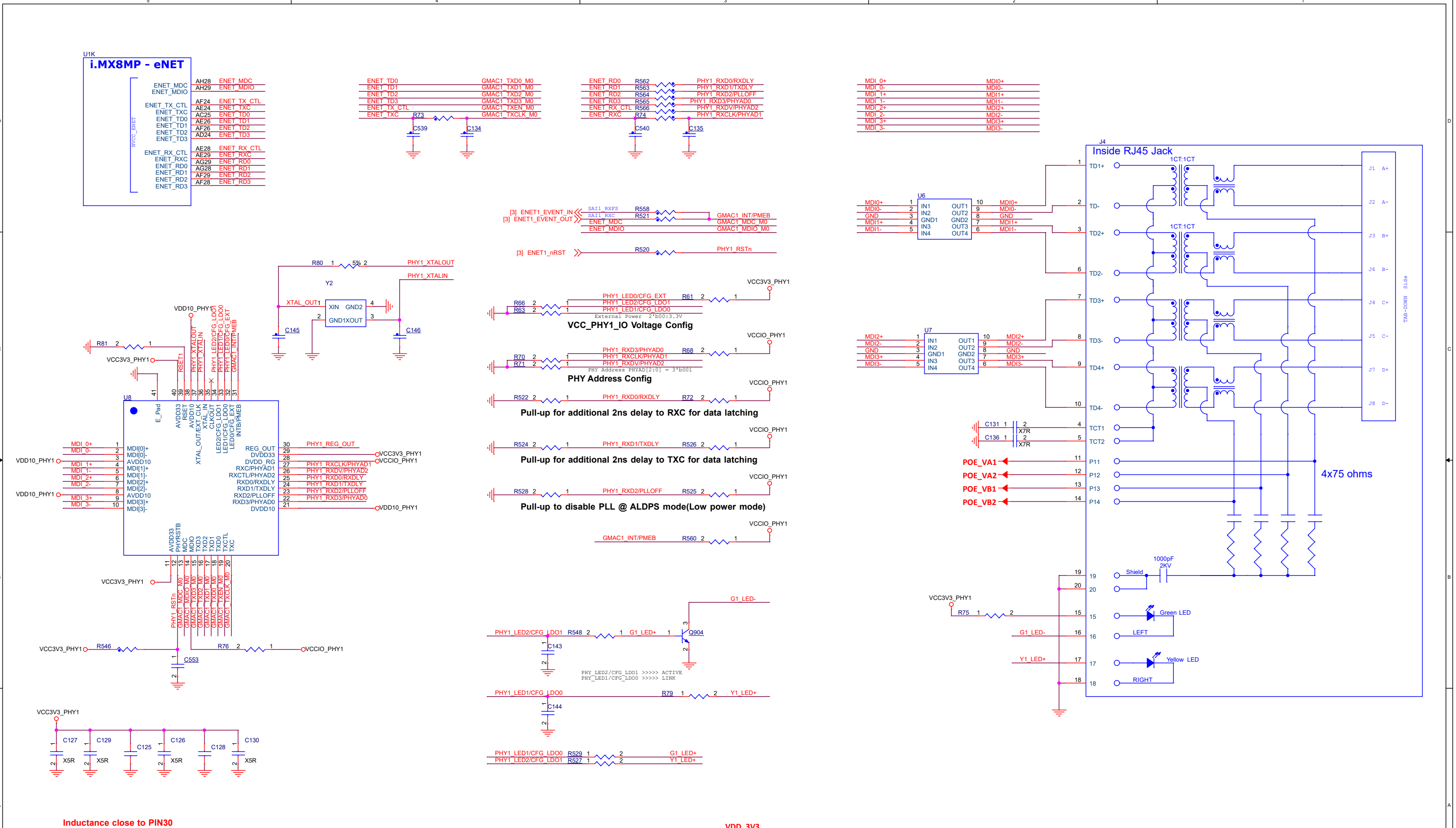

POLYHEX Beyond the Embedded Deployment

Polyhex Technology Company Limited

www.debix.io www.polyhex.net www.polyhexpc.com

This document contains information proprietary to Polyhex and shall not be used for engineering design, procurement or manufacture in whole or in part without the express written permission of Polyhex Semiconductors.

Designer: HW

Drawing Title: **DEBIX Infinity Schematics**

Reviewer: HW

Page Title: **PAGE05 ETHERNET1**

Date:

Sheet 5 of 11 Rev V02

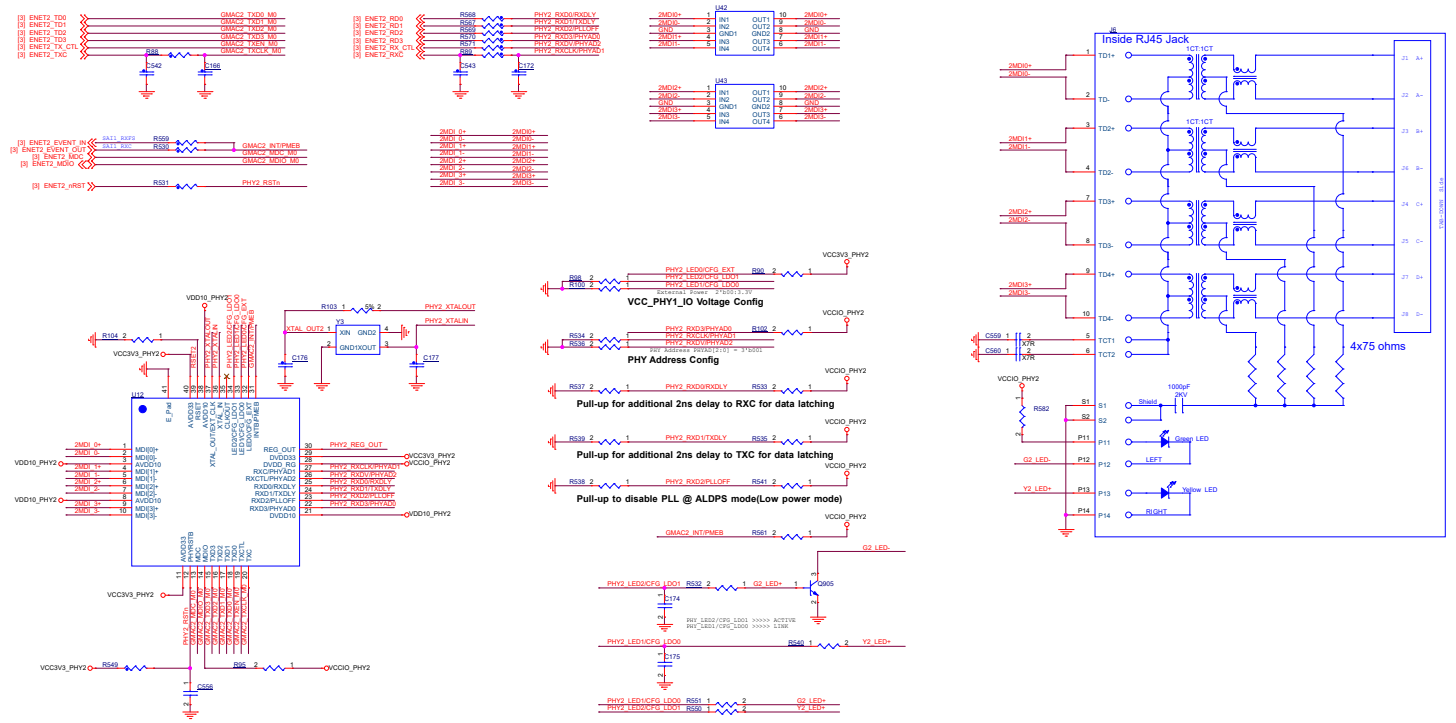

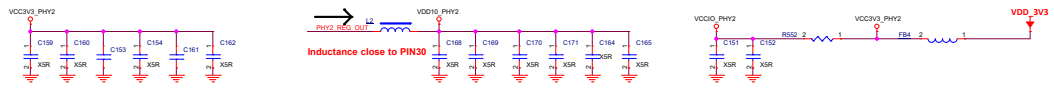

POLYHEX Beyond the Embedded Deployment	Polyhex Technology Company Limited www.debix.io www.polyhex.net www.polyhexpc.com
This document contains information proprietary to Polyhex and shall not be used for engineering design, procurement or manufacture in whole or in part without the express written permission of Polyhex Semiconductors.	
Designer: HW	Drawing Title: DEBIX Infinity Schematics
Reviewer: HW	Page Title: PAGE06 ETHERNET2
Date:	Sheet 6 of 11 Rev V02

SDIO WIFI/BT MODULE 2.4G/5G

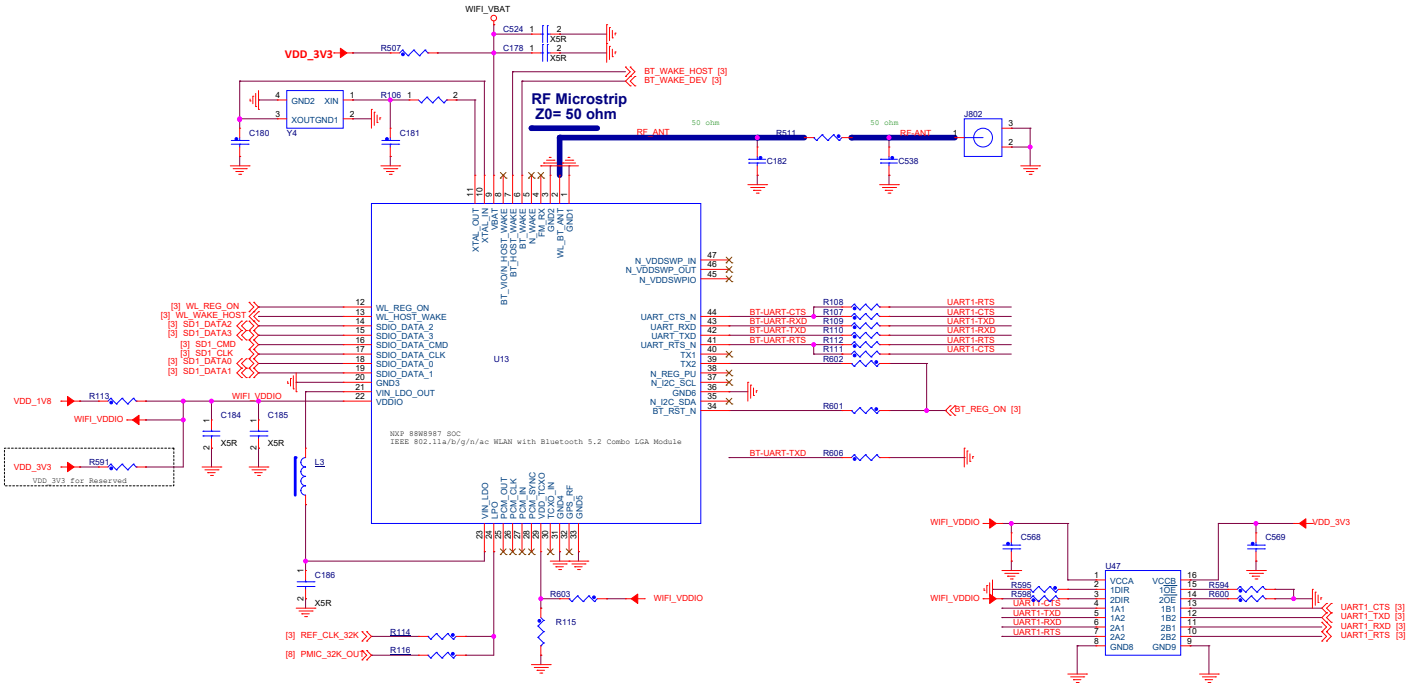

POLYHEX Beyond the Embedded Deployment	Polyhex Technology Company Limited www.debix.io www.polyhex.net www.polyhexpc.com
This document contains information proprietary to Polyhex and shall not be used for engineering design, procurement or manufacture in whole or in part without the express written permission of Polyhex Semiconductors.	
Designer: HW	Drawing Title: DEBIX Infinity Schematics
Reviewer: HW	Page Title: PAGE07 WIFI&BT
Date:	Sheet 7 of 11 Rev V02

SYS PMIC

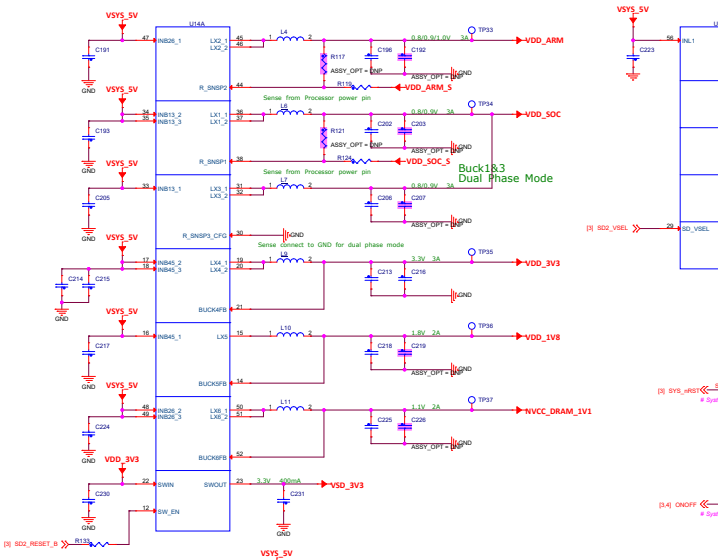

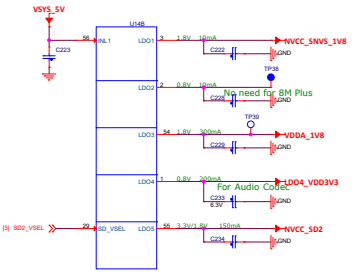

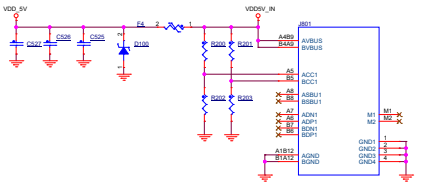

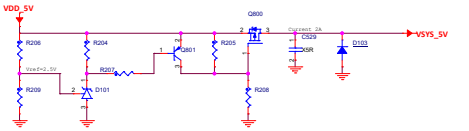

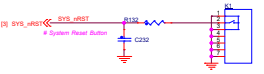

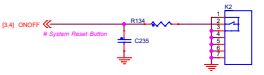

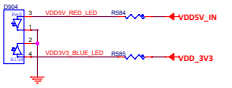

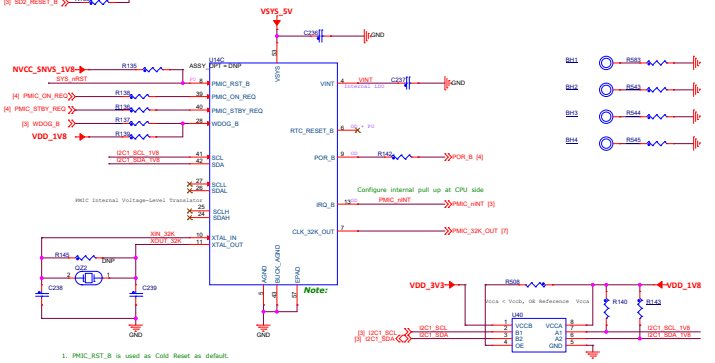

1. PMIC_RST_B is used as Cold Reset as default.
2. WDOG_B is used as Cold Reset, external pull up is needed for BSDL mode.

i.MX8M Plus LPDDR4 EVK Power Sequence

SEQ	PWR/Signal	REG	MIN	TYP	MAX	Max Current(mA)
1	NVCC_SNVS_1V8	LDO1	1.65	1.8	1.95	10
2	32K_INTERNAL	RTC_CLK	--	--	--	--
3	VDD_SOC	BUCK1/3	0.72/0.81	0.85/0.95	0.9/1.0	6000
4	VDD_ARM	BUCK2	0.72/0.81/0.9	0.85/0.95/1.0	0.9/1.0/1.025	3000
5	VDDA_1V8	LDO3	1.71	1.8	1.89	300
6	VDD_1V8/NVCC_xxx	BUCK5	1.65	1.8	1.95	2000
7	NVCC_DRAM_1V1	BUCK6	1.045	1.1	1.155	2000
8	VDD_3V3/NVCC_xxx	BUCK4	3	3.3	3.6	3000
8	VSD_3V3	MUXSW	3	3.3	3.6	400
9	NVCC_SD2	LDO5	3.0/1.65	3.3/1.8	3.6/1.95	150
10	POR_B	POR_B	--	--	--	--

POLYHEX Beyond the Embedded Deployment
Polyhex Technology Company Limited
www.debix.io www.polyhex.net www.polyhexpc.com
This document contains information proprietary to Polyhex and shall not be used for engineering design, procurement or manufacture in whole or in part without the express written permission of Polyhex Semiconductors.

Designer: HW	Drawing Title: DEBIX Infinity Schematics
Reviewer: HW	Page Title: PAGE08 PMIC&DC-IN
Date:	Sheet 8 of 11 Rev V02

HDMI OUT

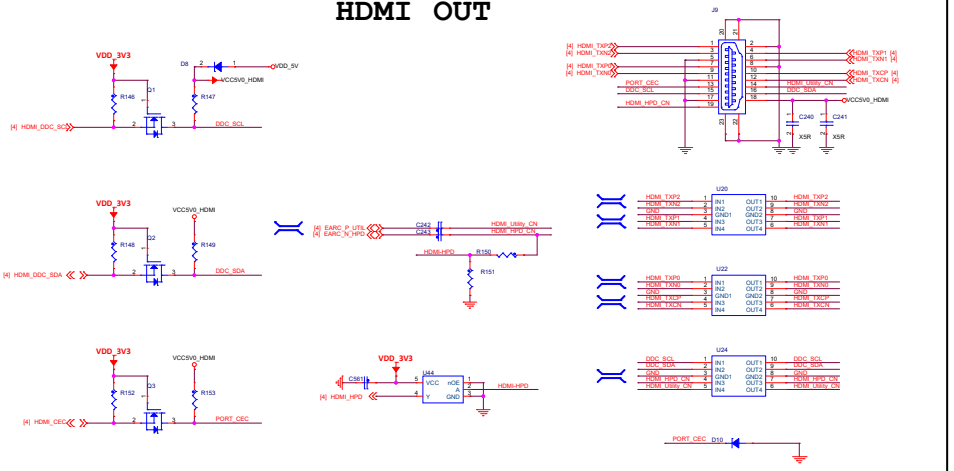

DUAL LVDS OUT

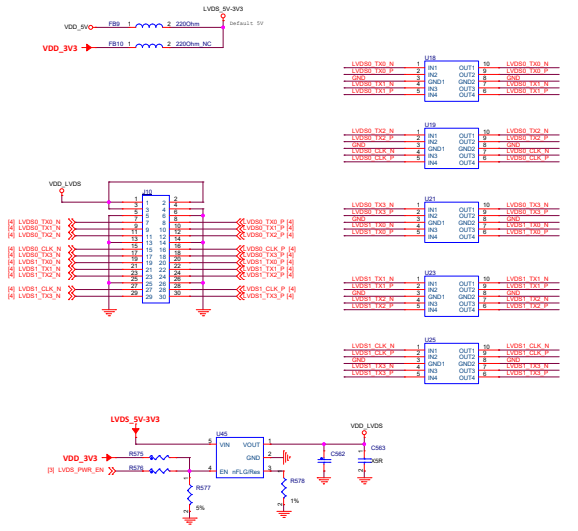

CSI1 INPUT

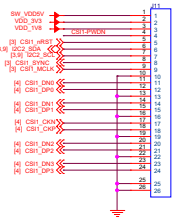

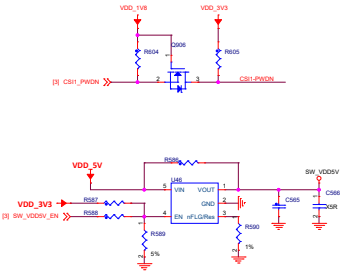

DSI OUTPUT

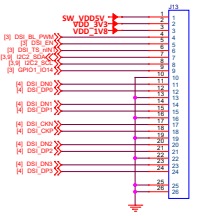

POLYHEX Beyond the Embedded Deployment	Polyhex Technology Company Limited www.debix.io www.polyhex.net www.polyhexpc.com	
This document contains information proprietary to Polyhex and shall not be used for engineering design, procurement or manufacture in whole or in part without the express written permission of Polyhex Semiconductors.		
Designer: HW	Drawing Title:	DEBIX Infinity Schematics
Reviewer: HW	Page Title:	PAGE09 HDMI&LVDS&DSI&CSI
Date:	Sheet 9 of 11	Rev V02

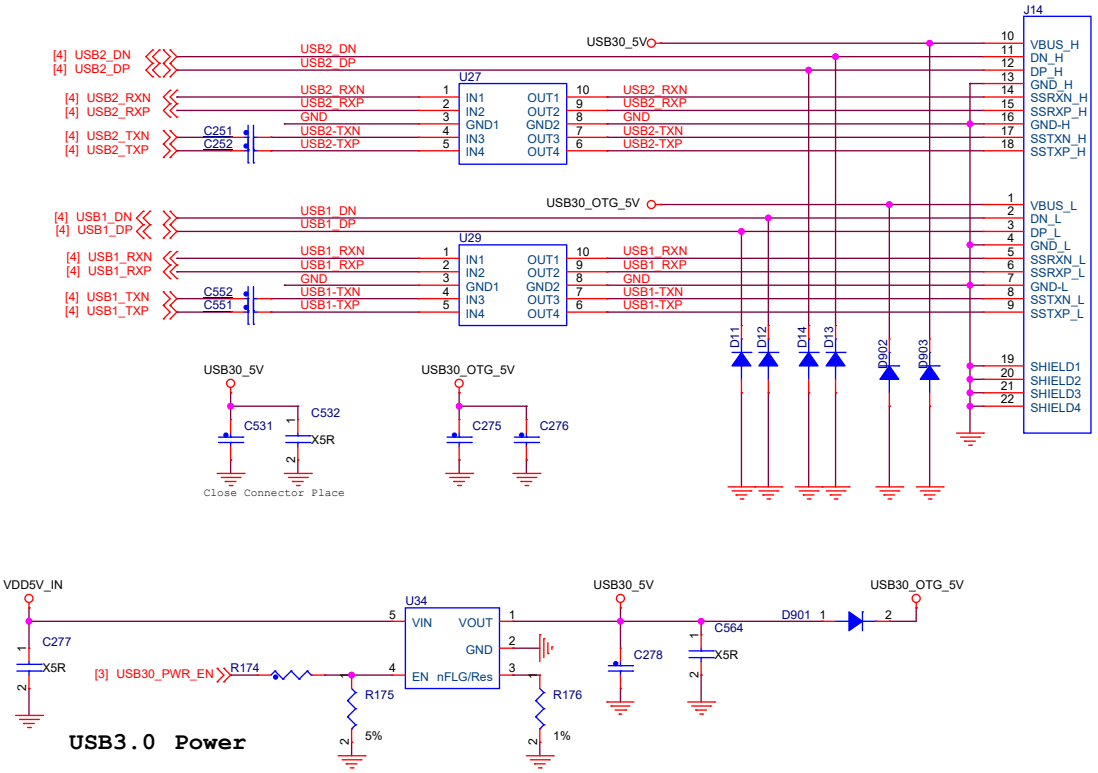

POLYHEX Beyond the Embedded Deployment	**Polyhex Technology Company Limited** www.debix.io www.polyhex.net www.polyhexpc.com
This document contains information proprietary to Polyhex and shall not be used for engineering design, procurement or manufacture in whole or in part without the express written permission of Polyhex Semiconductors.	
Designer: HW	Drawing Title: **DEBIX Infinity Schematics**
Reviewer: HW	Page Title: **PAGE10 OTG&USB30**
Date:	Sheet 10 of 11 Rev V02

EARPHONE

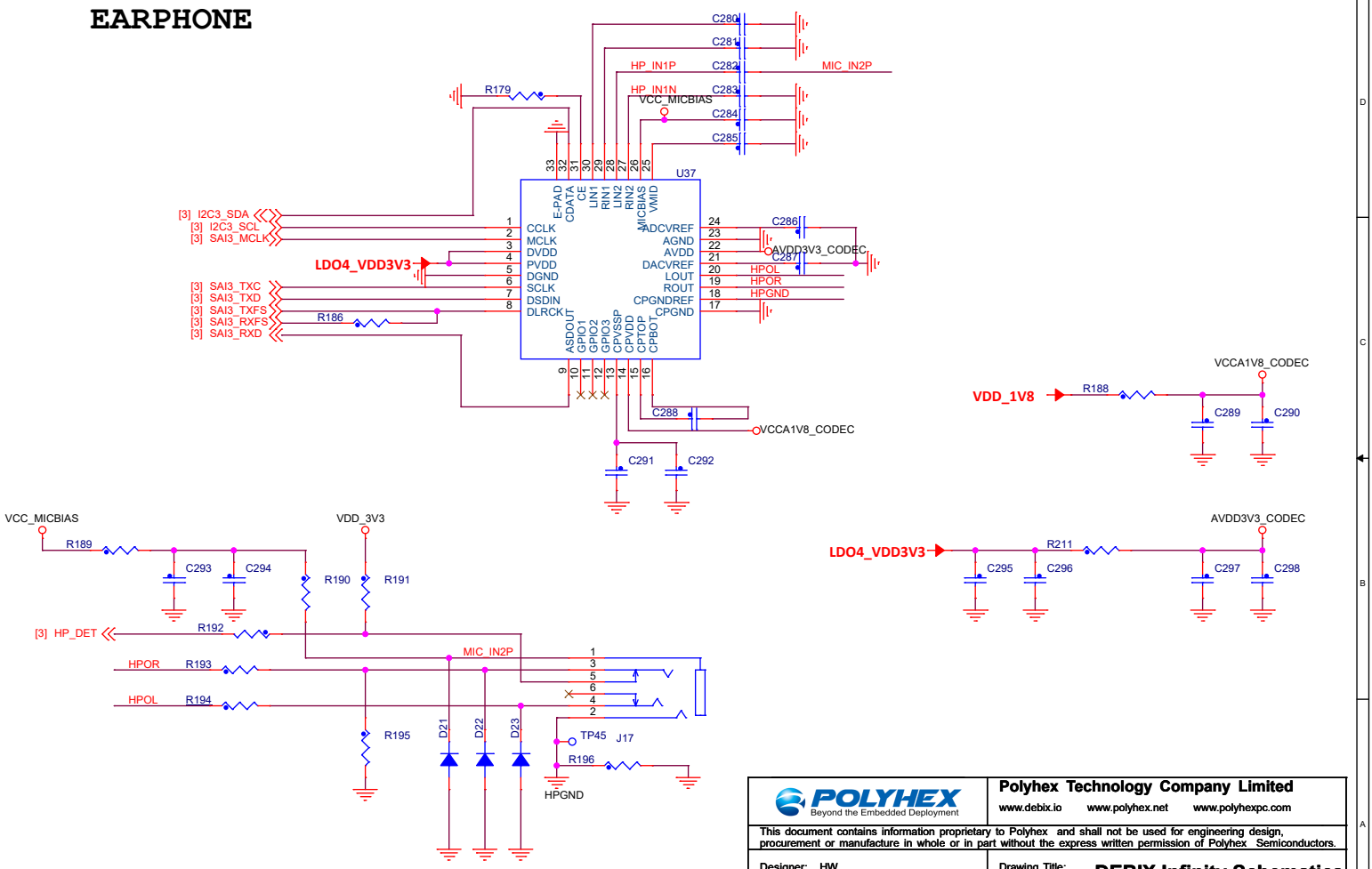

POLYHEX Beyond the Embedded Deployment	**Polyhex Technology Company Limited** www.debix.io www.polyhex.net www.polyhexpc.com
This document contains information proprietary to Polyhex and shall not be used for engineering design, procurement or manufacture in whole or in part without the express written permission of Polyhex Semiconductors.	
Designer: HW	Drawing Title: **DEBIX Infinity Schematics**
Reviewer: HW	Page Title: **PAGE11 AUDIO CODEC**
Date:	Sheet 11 of 11 — Rev V02